Power supply (and USB)

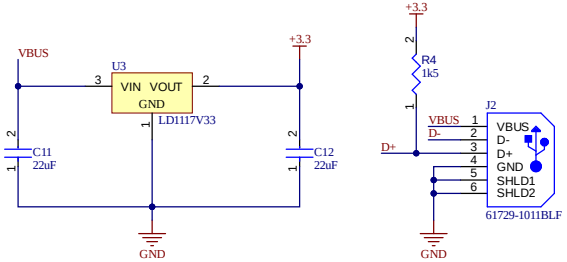

USB Data interface

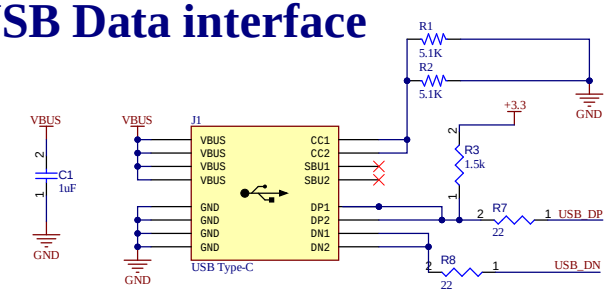

LCD

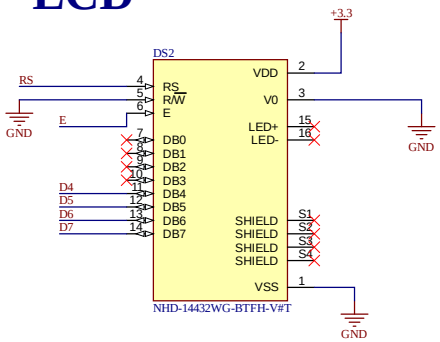

Microcontroller

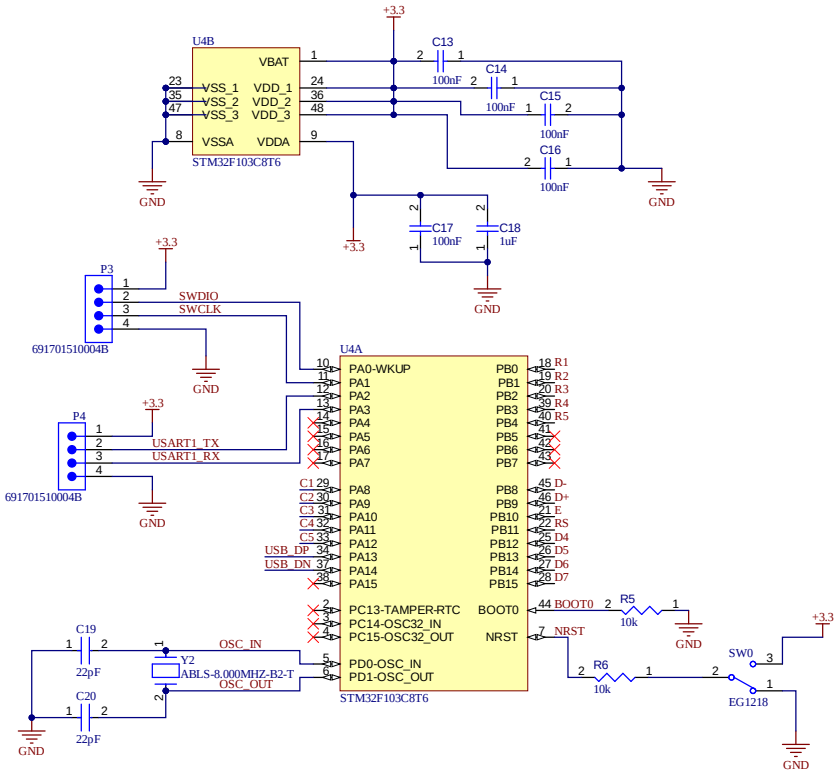

Button

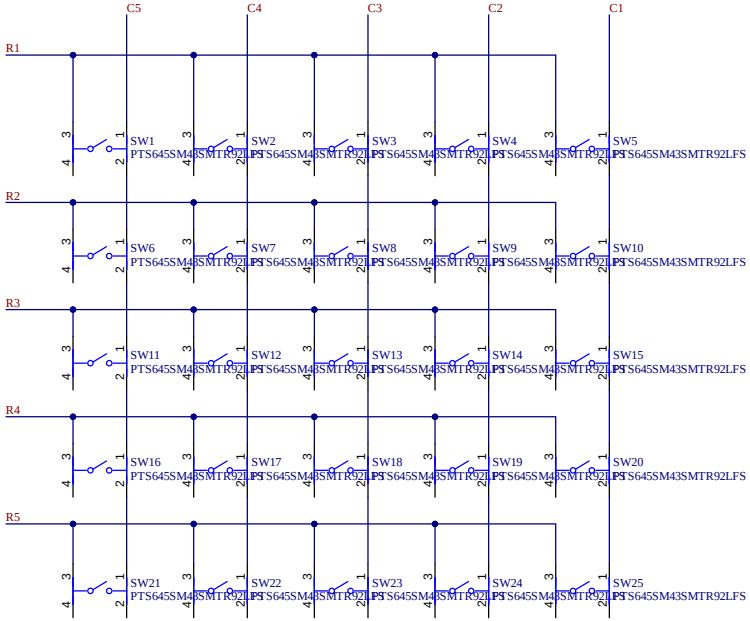

PORTABLE CACULATOR

Title: **Main system**	Course: **Embedded System Design**		
Designed by: **Group 3**	Instructed by: **MSc. Bui Quoc Bao**		
	Sheet **1** of **1**	Size: **A3**	
	Version: **1.0.0**	Date: **13/2/2026**	